Ordering number : EN1536B

CMOS LSI

LC4966

Quad Bilateral Switch

Overview

The LC4966 is an IC that provides the same functions as the MLC4066B and the MLC4066BH over an expanded usable voltage range. The LC4966 provides four bidirectional switch circuits. These circuits form a low-impedance conducting path between the input and output sides when the corresponding control input (CONT) is set high, and form a high-impedance nonconducting open circuit when the control input is set low.

Package Dimensions

unit: mm

3003A-DIP14

[LC4966]

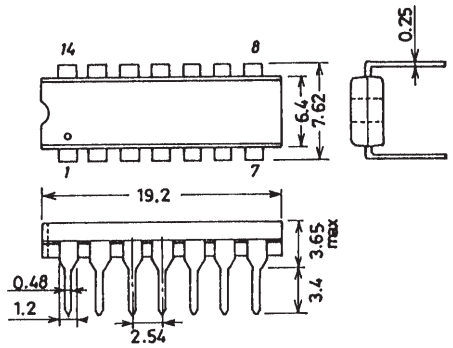

SANYO: DIP14

Specifications

Absolute Maximum Ratings at Ta = 25°C, V_{SS} = 0 V

Parameter	Symbol	Conditions	Ratings	Unit
Maximum supply voltage	V_{DD} max		V_{SS} – 0.5 to V_{SS} + 40	V
Input voltage	V_{IN}		V_{SS} – 0.5 to V_{DD} + 0.5	V
Output voltage	V_{OUT}		V_{SS} – 0.5 to V_{DD} + 0.5	V
Input current	I_{IN}		±10	mA
Potential difference between input and output when on	V_I-V_O		±0.5	V
Lead soldering temperature time	T_{sol}	t = 10 s	260	°C
Allowable power dissipation	Pd max	Ta ≤ 85°C, I_{IN} = ±10 mA	300	mW
Operating temperature	Topr		–40 to +85	°C
Storage temperature	Tstg		–65 to +150	°C

Allowable Operating Ranges at Ta = –40 to +85°C

Parameter	Symbol	Conditions	Ratings	Unit
Supply voltage	V_{DD}		3 to 37	V
Input voltage	V_{IN}		0 to V_{DD}	V

Equivalent Circuit

(1/4 LC4966)

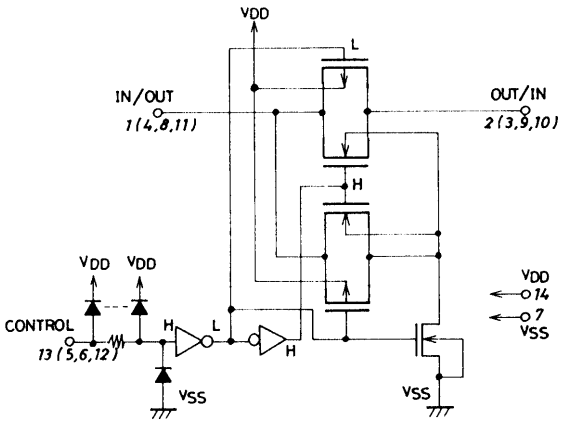

Pin Assignment and Equivalent Circuit Block Diagram

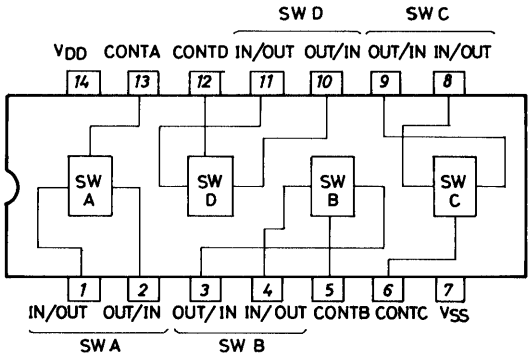

Electrical Characteristics at Ta = 25 ± 2°C, V_{SS} = 0 V

Parameter	Symbol	Conditions	min	typ	max	Unit
Input high-level control voltage	V_{IH}	V_{DD} = 5 V, for a current between input and output > 10 µA	3.5			V
		V_{DD} = 10 V, for a current between input and output > 10 µA	8.0			V
		V_{DD} = 15 V, for a current between input and output > 10 µA	12.5			V
		V_{DD} = 20 V, for a current between input and output > 10 µA	17.0			V
		V_{DD} = 30 V, for a current between input and output > 10 µA	27.0			V
		V_{DD} = 37 V, for a current between input and output > 10 µA	34.0			V
Input low-level control voltage	V_{IL}	V_{DD} = 5 V, for a current between input and output < 10 µA			1.0	V
		V_{DD} = 10 V, for a current between input and output < 10 µA			2.0	V
		V_{DD} = 15 V, for a current between input and output < 10 µA			2.5	V
		V_{DD} = 20 V, for a current between input and output < 10 µA			2.5	V
		V_{DD} = 30 V, for a current between input and output < 10 µA			3.0	V
		V_{DD} = 37 V, for a current between input and output < 10 µA			3.0	V

Continued on next page.

Continued from preceding page.

Parameter	Symbol	Conditions	min	typ	max	Unit
On resistance	R_{ON}	V_{DD} = 5 V, V_{IN} = 5 V, I = ±1 mA		110	220	Ω
		V_{DD} = 5 V, V_{IN} = 2.5 V, I = ±1 mA		90	180	Ω
		V_{DD} = 5 V, V_{IN} = 0.25 V, I = ±1 mA		110	220	Ω
		V_{DD} = 10 V, V_{IN} = 10 V, I = ±3 mA		70	140	Ω
		V_{DD} = 10 V, V_{IN} = 5 V, I = ±3 mA		50	100	Ω
		V_{DD} = 10 V, V_{IN} = 0.25 V, I = ±3 mA		70	140	Ω
		V_{DD} = 15 V, V_{IN} = 15 V, I = ±3 mA		60	120	Ω
		V_{DD} = 15 V, V_{IN} = 7.5 V, I = ±3 mA		40	80	Ω
		V_{DD} = 15 V, V_{IN} = 0.25 V, I = ±3 mA		60	120	Ω
		V_{DD} = 20 V, V_{IN} = 20 V, I = ±3 mA		60	120	Ω
		V_{DD} = 20 V, V_{IN} = 10 V, I = ±3 mA		40	80	Ω
		V_{DD} = 20 V, V_{IN} = 0.25 V, I = ±3 mA		60	120	Ω
		V_{DD} = 30 V, V_{IN} = 30 V, I = ±3 mA		50	100	Ω
		V_{DD} = 30 V, V_{IN} = 15 V, I = ±3 mA		35	70	Ω
		V_{DD} = 30 V, V_{IN} = 0.25 V, I = ±3 mA		50	100	Ω
		V_{DD} = 37 V, V_{IN} = 37 V, I = ±3 mA		45	90	Ω
		V_{DD} = 37 V, V_{IN} = 19 V, I = ±3 mA		30	60	Ω
		V_{DD} = 37 V, V_{IN} = 0.25 V, I = ±3 mA		45	90	Ω
		V_{DD} = +5 V, V_{IN} = –5 V, V_{IN} = 5 V, I = ±3 mA		70	140	Ω
		V_{DD} = +5 V, V_{SS} = –5 V, V_{IN} = ±0.25 V, I = ±3 mA		50	100	Ω
		V_{DD} = +5 V, V_{SS} = –5 V, V_{IN} = –5 V, I = ±3 mA		70	140	Ω
		V_{DD} = +7.5 V, V_{SS} = –7.5 V, V_{IN} = 5 V, I = ±3 mA		60	120	Ω
		V_{DD} = +7.5 V, V_{SS} = –7.5 V, V_{IN} = ±0.25 V, I = ±3 mA		40	80	Ω
		V_{DD} = +7.5 V, V_{SS} = –7.5 V, V_{IN} = –5 V, I = ±3 mA		60	120	Ω
		V_{DD} = +10 V, V_{SS} = –10 V, V_{IN} = 10 V, I = ±3 mA		60	120	Ω
		V_{DD} = +10 V, V_{SS} = –10 V, V_{IN} = ±0.25 V, I = ±3 mA		40	80	Ω
		V_{DD} = +10 V, V_{SS} = –10 V, V_{IN} = –10 V, I = ±3 mA		60	120	Ω
		V_{DD} = +15 V, V_{SS} = –15 V, V_{IN} = 15 V, I = ±3 mA		50	100	Ω
		V_{DD} = +15 V, V_{SS} = –15 V, V_{IN} = ±0.25 V, I = ±3 mA		35	70	Ω
		V_{DD} = +15 V, V_{SS} = –15 V, V_{IN} = –15 V, I = ±3 mA		50	100	Ω
		V_{DD} = +18.5 V, V_{SS} = –18.5 V, V_{IN} = 18.5 V, I = ±3 mA		45	90	Ω
		V_{DD} = +18.5 V, V_{SS} = –18.5 V, V_{IN} = ±0.25 V, I = ±3 mA		30	60	Ω
		V_{DD} = +18.5 V, V_{SS} = –18.5 V, V_{IN} = –18.5 V, I = ±3 mA		45	90	Ω
Input off leakage current	I_{OFF}	V_{DD} = 37 V, V_{IN} = 37 V, V_{OUT} = 0 V		±1	±500	nA
		V_{DD} = 37 V, V_{IN} = 0 V, V_{OUT} = 37 V		±1	±500	nA
Quiescent current drain	I_{DD}	V_{DD} = 5 V		0.001	1	μA
		V_{DD} = 10 V		0.001	2	μA
		V_{DD} = 15 V		0.002	4	μA
		V_{DD} = 20 V		0.004	8	μA
		V_{DD} = 25 V		0.01	20	μA
		V_{DD} = 30 V		0.02	40	μA
		V_{DD} = 35 V		0.04	80	μA
		V_{DD} = 37 V		0.1	160	μA
Input high-level control current	I_{IH}	V_{DD} = 37 V, V_{IN} = 37 V		10^{-4}	3	μA
Input low-level control current	I_{IL}	V_{DD} = 37 V, V_{IN} = 0 V		-10^{-4}	3	μA
Input capacitance	C_{IN}	Control inputs		5	7.5	pF
		Switch input and outputs		10		pF

Switching Characteristics at Ta = 25 ± 2°C

Parameter	Symbol	Conditions	min	typ	max	Unit
Transmission time (IN to OUT)	t_{PLH}, t_{PHL}	V_{DD} = 5 V, R_L = 10 kΩ, C_L = 50 pF		15	45	ns
		V_{DD} = 10 V, R_L = 10 kΩ, C_L = 50 pF		10	30	ns
		V_{DD} = 15 V, R_L = 10 kΩ, C_L = 50 pF		8	25	ns
		V_{DD} = 20 V, R_L = 10 kΩ, C_L = 50 pF		8	25	ns
		V_{DD} = 25 V, R_L = 10 kΩ, C_L = 50 pF		8	25	ns
		V_{DD} = 30 V, R_L = 10 kΩ, C_L = 50 pF		7	25	ns
		V_{DD} = 35 V, R_L = 10 kΩ, C_L = 50 pF		7	25	ns
		V_{DD} = 37 V, R_L = 10 kΩ, C_L = 50 pF		7	25	ns
Transmission time (control → OUT)	t_{PLH}, t_{PHL}	V_{DD} = 5 V, R_L = 10 kΩ, C_L = 50 pF		100	200	ns
		V_{DD} = 10 V, R_L = 10 kΩ, C_L = 50 pF		40	70	ns
		V_{DD} = 15 V, R_L = 10 kΩ, C_L = 50 pF		35	60	ns
		V_{DD} = 20 V, R_L = 10 kΩ, C_L = 50 pF		35	60	ns
		V_{DD} = 25 V, R_L = 10 kΩ, C_L = 50 pF		35	60	ns
		V_{DD} = 30 V, R_L = 10 kΩ, C_L = 50 pF		35	60	ns
		V_{DD} = 35 V, R_L = 10 kΩ, C_L = 50 pF		35	60	ns
		V_{DD} = 37 V, R_L = 10 kΩ, C_L = 50 pF		35	60	ns
Maximum control input frequency	f max (c)	V_{DD} = 5 V, C_L = 15 pF		1.0		MHz
		V_{DD} = 10 V, C_L = 15 pF		1.0		MHz
		V_{DD} = 20 V, C_L = 15 pF		1.0		MHz
		V_{DD} = 30 V, C_L = 15 pF		1.0		MHz
		V_{DD} = 37 V, C_L = 15 pF		1.0		MHz
Maximum transmission frequency	f max (I-O)	V_{DD} = +5 V, V_{SS} = –5 V, R_L = 10 kΩ, C_L = 15 pF*1		35		MHz
		V_{DD} = +10 V, V_{SS} = –10 V		40		MHz
		V_{DD} = +15 V, V_{SS} = –15 V		50		MHz
		V_{DD} = +18.5 V, V_{SS} = –18.5 V		50		MHz
Sine wave total harmonic distortion		V_{DD} = +5 V, V_{SS} = –5 V, R_L = 10 kΩ, f = 1 kHz*2		0.010		%
		V_{DD} = +10 V, V_{SS} = –10 V		0.005		%
		V_{DD} = +15 V, V_{SS} = –15 V		0.005		%
		V_{DD} = +18.5 V, V_{SS} = –18.5 V		0.005		%
Feedthrough (switch off state)		V_{DD} = +5 V, V_{SS} = –5 V, R_L = 10 kΩ*3		1		MHz
		V_{DD} = +10 V, V_{SS} = –10 V		1		MHz
		V_{DD} = +15 V, V_{SS} = –15 V		1		MHz
		V_{DD} = +18.5 V, V_{SS} = –18.5 V		1		MHz

Note 1. Vis is a ±2.5 Vp-p sine wave; fmax: 20log (Vos/Vis) = the –3 dB frequency.
2. Vis is a ±2.5 Vp-p sine wave.
3. Vis is a ±2.5 Vp-p sine wave. Frequency (feedthrough): 20log(Vos/Vis) = –50 dB

Test Circuits and Waveforms

Unit (resistance: Ω, capacitance: F)

1. t_{PLH}, t_{PHL} (IN-OUT) Test Circuit

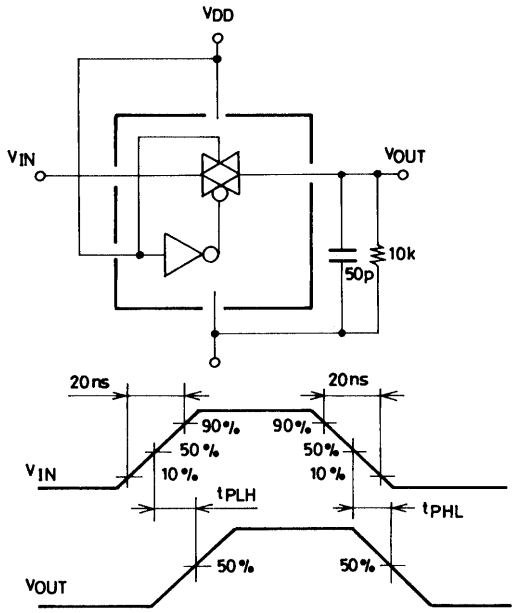

2. t_{PLH}, t_{PHL} (Control-OUT) Test Circuit

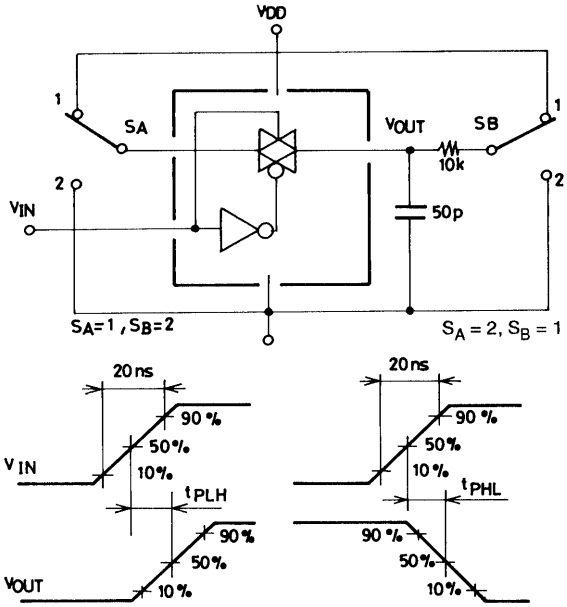

3. R_{ON} Test Circuit

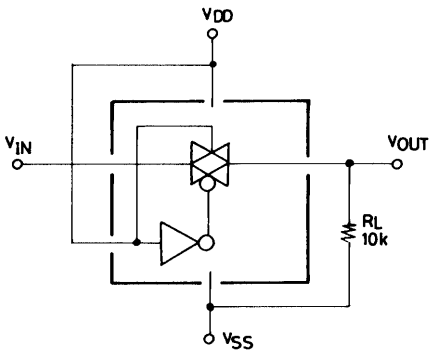

$$R_{ON} = \frac{(V_{IN} - V_{OUT})}{V_{OUT}} \times 10\ k\Omega$$

4. Feedthrough Test Circuit

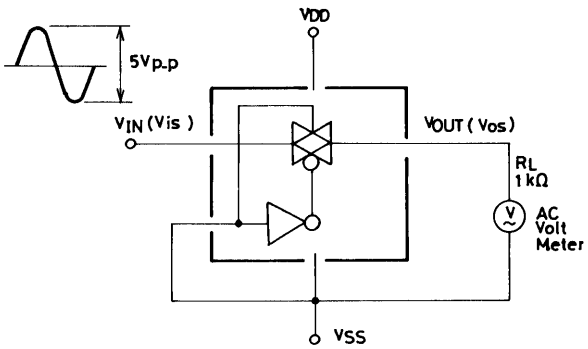

$$f: 20 \log \frac{V_{OS}}{V_{IS}} = -50\ dB$$

5. Crosstalk

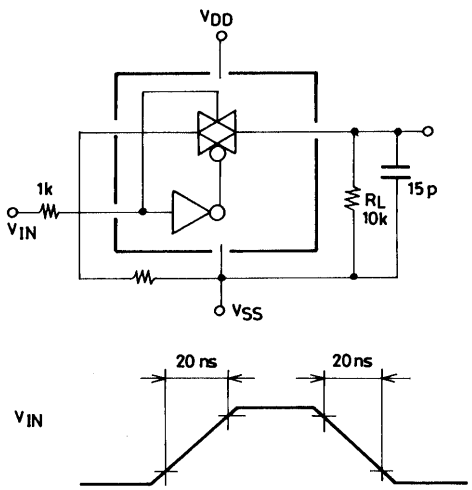

6. Frequency Response (f max) and Total Harmonic Distortion

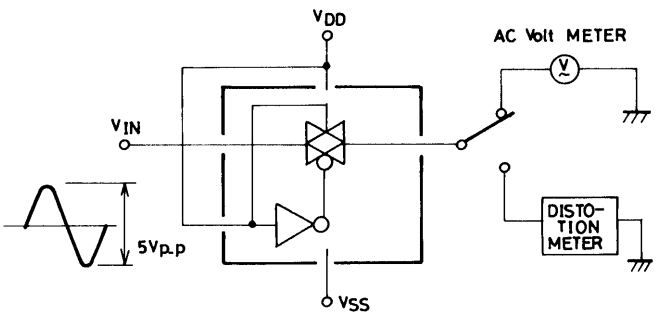

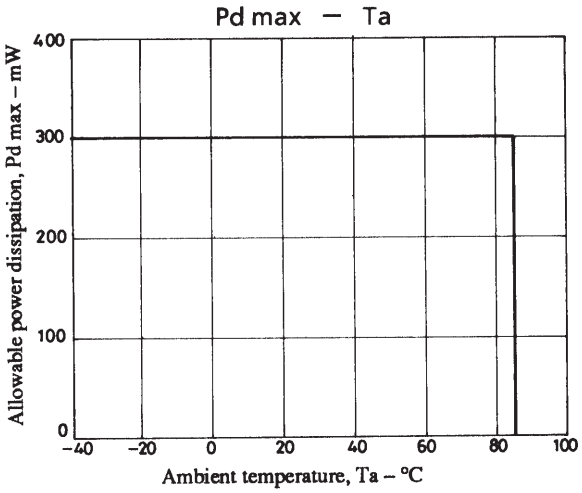

■ No products described or contained herein are intended for use in surgical implants, life-support systems, aerospace equipment, nuclear power control systems, vehicles, disaster/crime-prevention equipment and the like, the failure of which may directly or indirectly cause injury, death or property loss.

■ Anyone purchasing any products described or contained herein for an above-mentioned use shall:
① Accept full responsibility and indemnify and defend SANYO ELECTRIC CO., LTD., its affiliates, subsidiaries and distributors and all their officers and employees, jointly and severally, against any and all claims and litigation and all damages, cost and expenses associated with such use:
② Not impose any responsibility for any fault or negligence which may be cited in any such claim or litigation on SANYO ELECTRIC CO., LTD., its affiliates, subsidiaries and distributors or any of their officers and employees jointly or severally.

■ Information (including circuit diagrams and circuit parameters) herein is for example only; it is not guaranteed for volume production. SANYO believes information herein is accurate and reliable, but no guarantees are made or implied regarding its use or any infringements of intellectual property rights or other rights of third parties.

This catalog provides information as of December, 1997. Specifications and information herein are subject to change without notice.