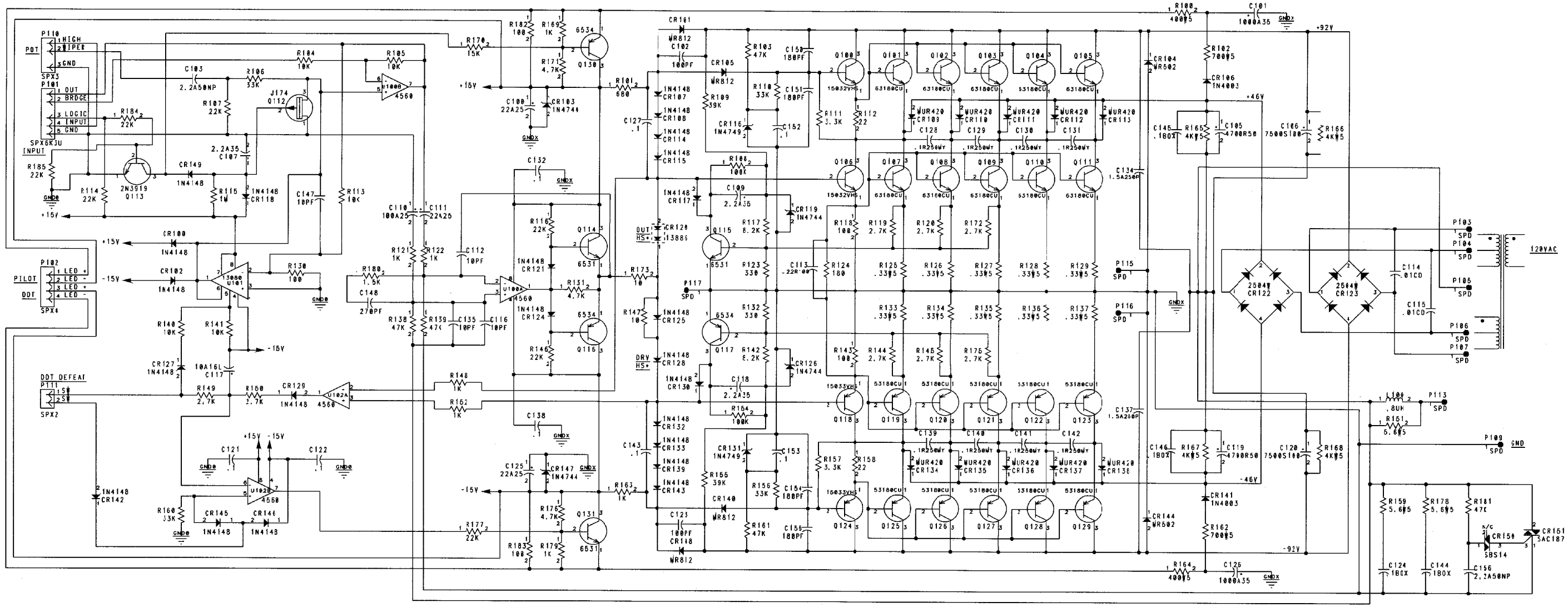

"COMPANY PROPRIETARY INFORMATION"

PEAVEY ELECTRONICS CORP.
711 A STREET
Meridion, Mississippi 39301

TITLE: CS 1800 POWER AMPLIFIER

SIZE	CODE	NUMBER	REV
D		81502395	C

PRINT DATE 20-OCT-99 SHEET 1 OF 1

COPYRIGHT 1999 PEAVEY ELECTRONICS CORP. PRINTED IN U.S.A.

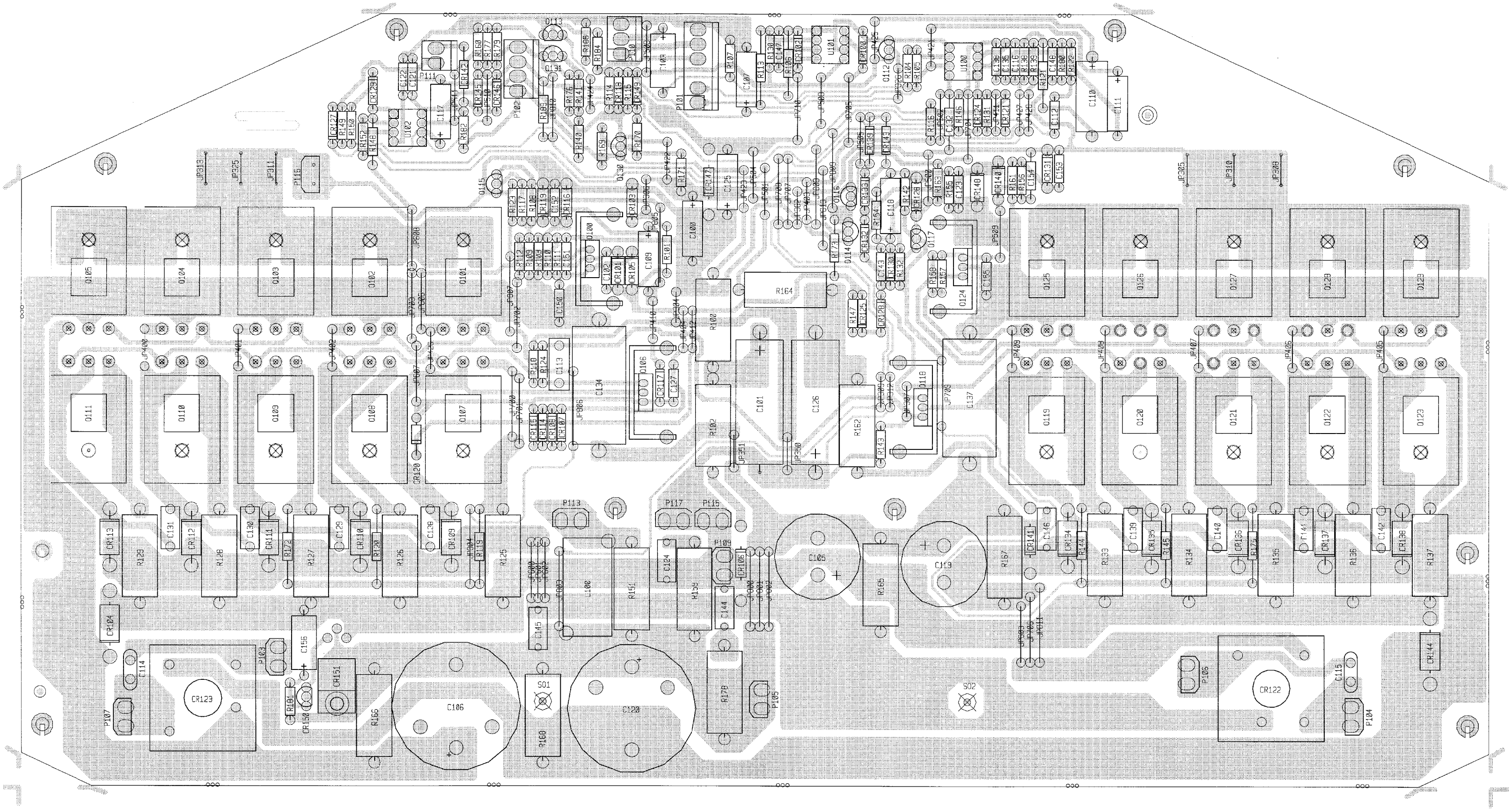

CS1800G Output

BOARD NAME: CS1800G POWER
PART PART DESCRIPTION AND
** QTY. NAME VALUE NUMBER DEVICE DESIGNATIONS **********
****

2 .01CD .01CD 70320248 .01MF----20%---1000VDC---CD--T&A

C114, C115

8 .1 .1 70340100 .1MF-----+80-20%--50VDC----AXL----T&R

C121, C122, C127, C132, C138, C143,
C152, C153

4 .1BOX .1BOX 70320086 .1 MFD 100VDC 10% BOX CAP

C124, C144, C145, C146

8 .1R250MY .1R250MY 70320096 .1 MFD 250VDC MYLAR CA/BR

C128, C129, C130, C131, C139, C140,
C141, C142

1 .22R100 .22R100 70330007 .22MFD 100VDC 5% MYLAR

C113

10 .33W5 .33W5 70250003 .33--5W--10%--WW--AXL

R125, R126, R127, R128, R129, R133,
R134, R135, R136, R137

1 .8UH .8UH 70519917 .8UH AIR CORE COIL / CS1200

L100

2 1.5A250P 1.5A250P 70320175 1.5MF 10% 250VDC PP AXL

C134, C137

1 1.5K 1.5K 70240018 1.5K--1/4W--5%----CF--T&R

R180

2 10 10 70240003 10----1/4W--5%----CF--T&R

R147, R173

5 100 100 70240010 100---1/4W--5%----CF--T&R

R118, R130, R143, R182, R183

2 1000A35 1000A35 70320038 1000 MFD 35VDC LYTIC CAP

C101, C126

1 100A25 100A25 70320014 100 MFD 25VDC LYTIC CAP

C110

2 100K 100K 70240034 100K--1/4W--5%----CF--T&R

R108, R154

2 100PF 100PF 70340054 100PF-----10%----50VDC----T/C----T&R

C102, C123

1 10A16L 10A16L 70320198 10MFD 16V LOW LEAKAGE T&R

C117

5 10K 10K 70240025 10K---1/4W--5%----CF--T&R

R104, R105, R113, R140, R141

4 10PF 10PF 70340050 10PF------5%----------T/C----T&R

C112, C116, C135, C147

2 125SOW 70900788 70900788 SPACER, 1/8,R(#4),.187 SWAGE ALUM.

SO1, SO2

1 13080 13080 70413080 LM3080N CUSTOM SELECTED

U101

1 13886 13886 70413886 SZ-13886-2 DUAL DIODE

CR120

2 15032VHS 15O32VHS 70415032 MJE-15032 NPN HI-VLTG TO-220 DRIVER
W/70900629H

Q100, Q106

2 15033VHS 15O33VHS 70415033 MJE-15033 PNP HI-VLTG TO-220 DRIVER
W/70900629HS

Q118, Q124

1 15K 15K 70240027 15K---1/4W--5%----CF--T&R

R170

1 180 180 70240012 180---1/4W--5%----CF--T&R

R124

4 180PF 180PF 70340056 180PF-----10%----50VDC----T/C----T&R

C150, C151, C154, C155

7 1K 1K 70240017 1K----1/4W--5%----CF--T&R

R121, R122, R148, R152, R163, R169, R179

1 1M 1M 70240039 1M----1/4W--5%----CF--T&R

R115

2 1N4003 1N4003 70464003 1N4003 200V SILICON DIODE

CR106, CR141

23 1N4148 4148 70464148 1N4148 75V 10MA SILICON DIODE

CR100, CR102, CR107, CR108, CR114,
CR115, CR117, CR118, CR121, CR124,
CR125, CR127, CR128, CR129, CR130,
CR132, CR133, CR139, CR142, CR143,
CR145, CR146, CR149

4 1N4744 4744 70440102 SZG40102 15V 5% ZENER DIODE

CR103, CR119, CR126, CR147

2 1N4749 4749 70466164 1N4749ARL 24.5V 5% ZD T&R

CR116, CR131

3 2.2A35 2.2A35 70320200 2.2MFD 35VDC LY.CAP T&R

C107, C109, C118

2 2.2A50NP 2.2A50NP 70320010 2.2MFD 20% 50V NP EL T&R

C103, C156

8 2.7K 2.7K 70240021 2.7K--1/4W--5%----CF--T&R

R119, R120, R144, R145, R149, R150,
R172, R175

2 22 22 70240007 22----1/4W--5%----CF--T&R

R112, R158

3 22A25 22A25 70320012 22MFD +/-20% 25VDC EL AXL

C100, C111, C125

7 22K 22K 70240029 22K---1/4W--5%----CF--T&R

R107, R114, R116, R146, R177, R184, R185

2 2504W 2504W 70402504 BR. RECT, 400V, 25A, WIRE LEADS

CR122, CR123

1 270PF 270PF 70340057 270PF-----10%----50VDC----T/C----T&R

C148

1 2N3919 3919 70463919 SKA-3919 TO92 NPN TRANS T&A

Q113

2 3.3K 3.3K 70240022 3.3K--1/4W--5%----CF--T&R

R111, R157

2 330 330 70240014 330---1/4W--5%----CF--T&R

R123, R132

4 33K 33K 70240030 33K---1/4W--5%----CF--T&R

R106, R110, R156, R160

2 39K 39K 70240048 39K---1/4W--5%----CF--T&R

R109, R155

3 4.7K 4.7K 70240023 4.7K--1/4W--5%----CF--T&R

R131, R171, R176

2 400W5 400W5 70250062 400--5W--10%--WW--AXL

R100, R164

2 4560 4560 70414560 4560 DUAL OP AMP IC

U100, U102

2 4700R50 4700R50 70320260 4700MF----20%----50VDC--EL--r/s

C105, C119

5 47K 47K 70240031 47K---1/4W--5%----CF--T&R

R103, R138, R139, R161, R181

4 4KW5 4KW5 70250050 4K--5W--10%--WW--AXL

R165, R166, R167, R168

3 5.6W5 5.6W5 70250026 5.6--5W--10%--WW--AXL

R151, R159, R178

10 53180CU 53180CU 70453180 SJ-53180 PNP PLASTIC POWER TRANSISTOR

Q119, Q120, Q121, Q122, Q123, Q125,
Q126, Q127, Q128, Q129

10 63180CU 63180CU 70463180 SJ-63180 NPN PLASTIC POWER TRANSISTOR

Q101, Q102, Q103, Q104, Q105, Q107,
Q108, Q109, Q110, Q111

3 6531 6531 70466531 MPS-6531 TO92 NPN TRANS. T&A

Q114, Q115, Q131

3 6534 6534 70466533 MPS-6533/34 TO-92 PNP TRANS T&A

Q116, Q117, Q130

1 680 680 70240016 680---1/4W--5%----CF--T&R

R101

2 700W5 700W5 70250061 700--5W--10%--WW--AXL

R102, R162

2 7500S100 7500S100 70320263 7500MF 100V RADIAL 35MM X 63MM

C106, C120

2 8.2K 8.2K 70240049 8.2K--1/4W--5%----CF--T&R

R117, R142

1 J174 J174 70460174 J-174 30V TO-92 P-CHAN FET T&A

Q112

2 MR502 MR502 70400502 MR502/1N5402 200V, 3A SILICON DIODE

CR104, CR144

4 MR812 MR812 70404933 MR812 FAST RECOVERY DIODE

CR101, CR105, CR140, CR148

10 MUR420 MUR420 70420420 MUR-420 FAST RECOVERY DIODE

CR109, CR110, CR111, CR112, CR113,
CR134, CR135, CR136, CR137, CR138

1 SAC187 SAC187 70400187 SAC187 200V TO220 TRIAC

CR151

1 SBS14 SBS14 70460014 SBS14 8V T0-92 BI-DIRECTIOAL SWITCH T&A

CR150

10 SPD 73716194 73716194 .250 PC MNT SPADE .093 PCB

P103, P104, P105, P106, P107, P109,
P113, P115, P116, P117

1 SPX2 SPX2 XXXXXXXX 2 EACH OF STAKE PINS

P111

1 SPX3 SPX3 XXXXSPX3 3 EACH OF STAKE PINS

P110

1 SPX4 SPX4 XXXXXXXX 4 EACH OF STAKE PINS

P102

1 SPX6K3U SPX6K3U XXXXXXXX 5 EACH OF STAKE PINS

P101

****

LAST REF USED: C101 CR103 J113 R101 S103

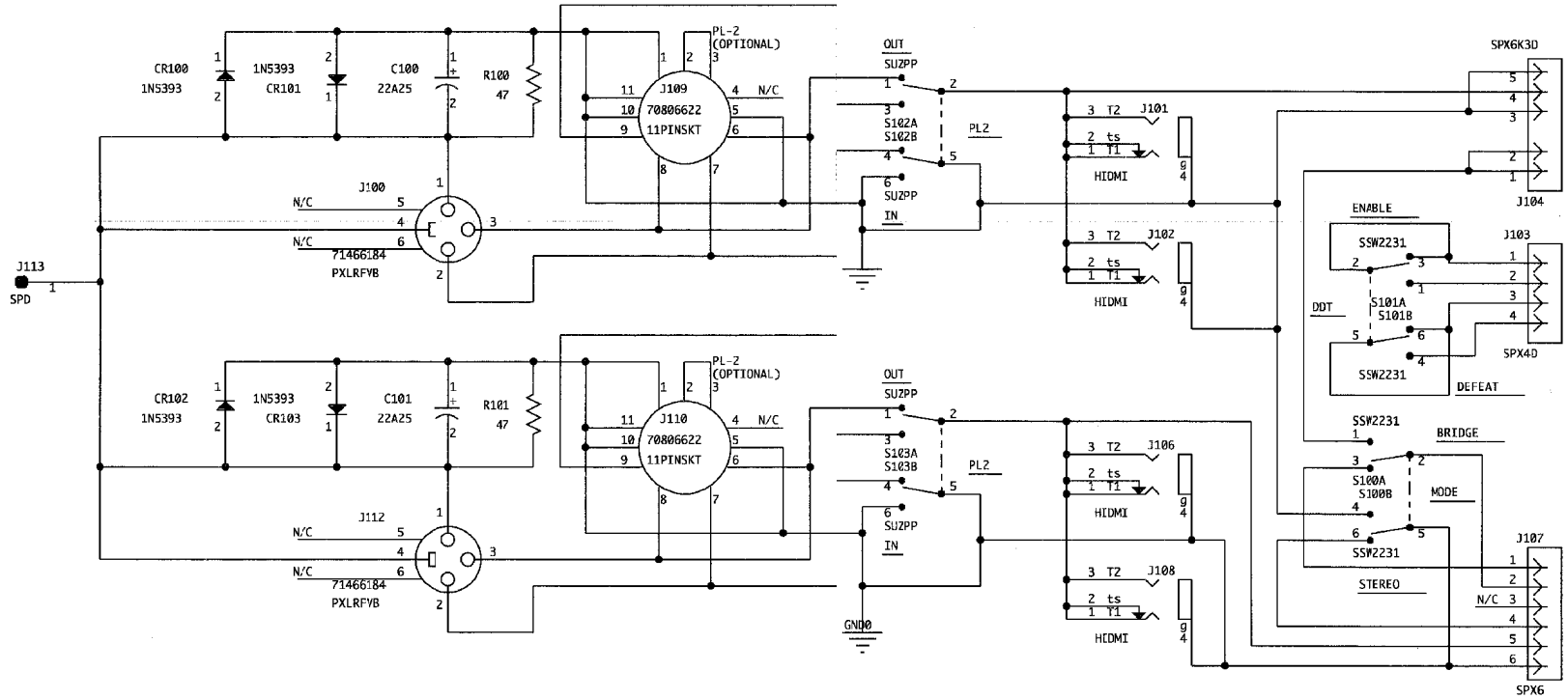

NOTICE: THIS CIRCUITRY IS PROTECTED BY U.S. PATENT NO. 5,387,875 (FOREIGN PATENT NOS. PENDING) OWNED BY PEAVEY ELECTRONICS CORP. USE OR COPYING WITHOUT EXPRESS WRITTEN AUTHORITY FROM PEAVEY IS STRICTLY FORBIDDEN AND VIOLATORS WILL BE PROSECUTED TO THE FULLEST EXTENT ALLOWED UNDER U.S.PATENT LAWS.

COPYRIGHT 1995 PEAVEY ELECTRONICS CORP. PRINTED IN U.S.A.

PEAVEY ELECTRONICS CORP.
711 A STREET
MERIDIAN, MISSISSIPPI 39301

TITLE
VX 1.5K INPUT BOARD

SIZE	CODE	NUMBER	REV
B PRINT		99351710 #81502395	A
DATE 14-JUN-95		SHEET 1 OF 1	

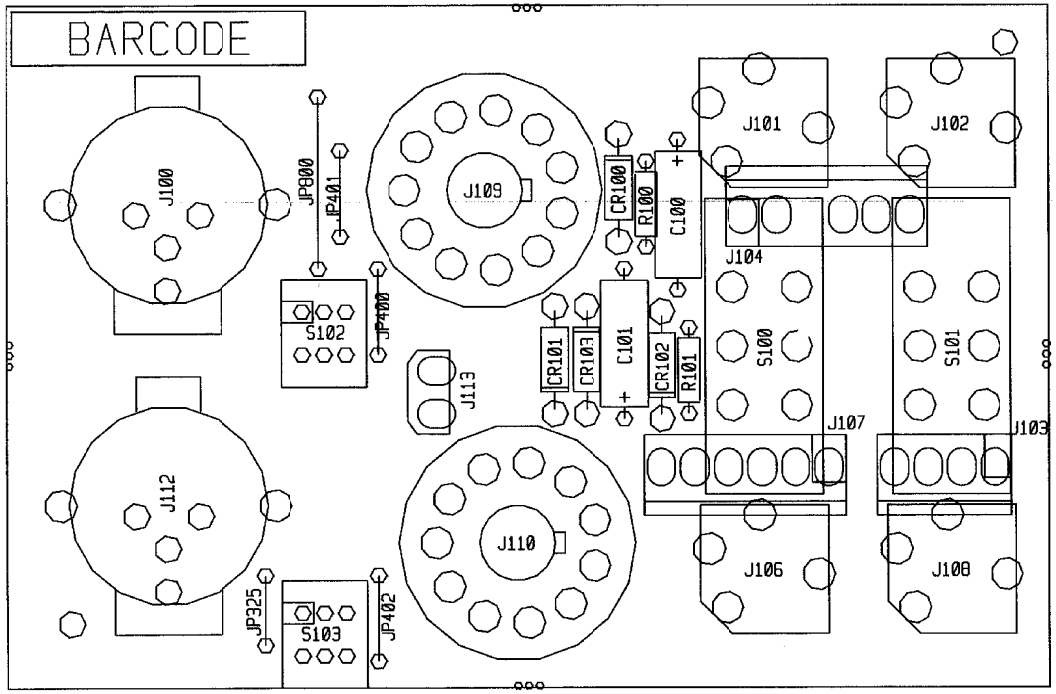

VX1.5K Input

BOARD NAME: VX1.5K INPUT
ASSEMBLY LEVEL NUMBER: 99351710

PART * QTY.	NAME	PART VALUE	NUMBER	DESCRIPTION AND DEVICE DESIGNATIONS **********
2	22A25	22A25	70320012	22MFD +/-20% 25VDC EL AXL C100, C101
4	1N5393	5393	70465393	1N5393-RL 200V, 1.5, 5% DIODE -T&R CR100, CR101, CR102, CR103
1	PXLRFVB	71456184	71466184	XLB CONN VERT FEMALE W/BRKT J100
2	HIDMI	71456215	71466215	2 TIP HID JACK INSU W/SPD J101, J102
1	SPX4D	SPX4D	XXXXXXXX	4 EACH OF STAKE PINS J103
1	SPX6K3D	SPX5K3D	XXXXXXXX	5 EACH OF STAKE PINS J104
1	HIDMI	71456215	71466215	2 TIP HID JACK INSU W/SPD J106
1	SPX6	SPX5	XXXXXXXX	6 EACH OF STAKE PINS J107
1	HIDMI	71456215	71466215	2 TIP HID JACK INSU W/SPD J108
2	11PINSKT	11PINSKT	70806622	11 PIN PCMNT TUBE SOCKET .750 J109, J110
1	PXLRFVB	71456184	71466184	XLB CONN VERT FEMALE W/BRKT J112
1	SPD	73716194	73716194	.250 PC MNT SPADE .093 PCB J113
2	47	47	70240008	47--1/4W-5%--CF-T&R R100, R101
2	SSW2231	SSW2231	71322231	DPDT SLIDE SW LQ LEAD S100, S101
2	SUZPP	SUZPP	71322251	SUZ P/P SWITCH PC MOUNT S102, S103

****

LAST REF USED: CR101 J101 VR100

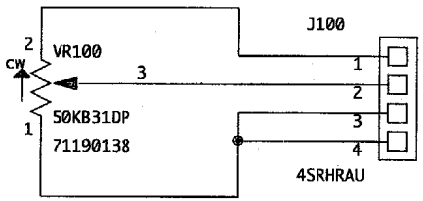

NOTICE: THIS CIRCUITRY IS PROTECTED BY U.S. PATENT NO. 5,387,876 (FOREIGN PATENT NOS. PENDING) OWNED BY PEAVEY ELECTRONICS CORP. USE OR COPYING WITHOUT EXPRESS WRITTEN AUTHORITY FROM PEAVEY IS STRICTLY FORBIDDEN AND VIOLATORS WILL BE PROSECUTED TO THE FULLEST EXTENT ALLOWED UNDER U.S.PATENT LAWS.

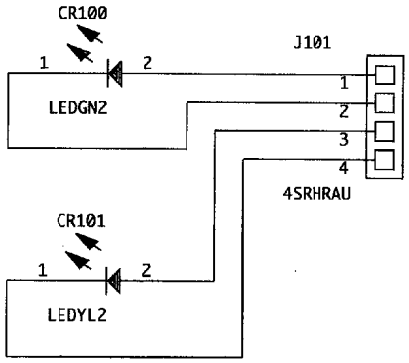

COPYRIGHT 1995 PEAVEY ELECTRONICS CORP. PRINTED IN U.S.A.

PEAVEY ELECTRONICS CORP. 711 A Street Meridian, Mississippi 39301			
TITLE VX1.5K A CONTROL			
SIZE A PRINT	CODE	NUMBER 99351730 #81502395	REV B
DATE 14-JUN-95		SHEET 1 OF 1	

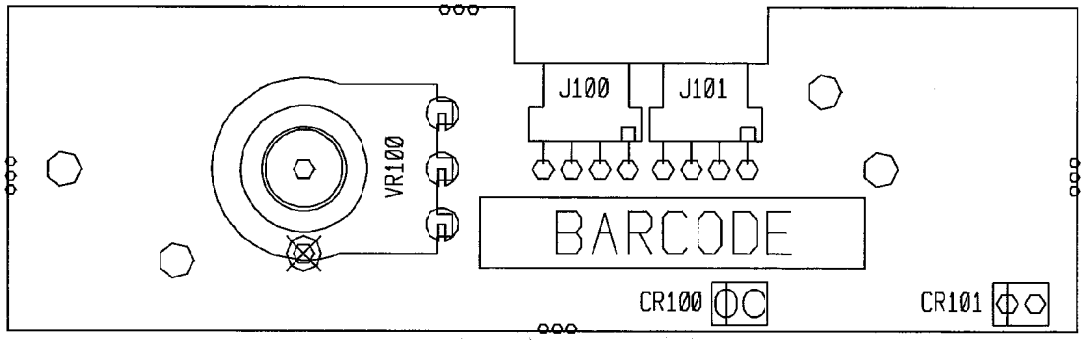

VX1.5k "A" Control

BOARD NAME: VX1.5K A CTL
ASSEMBLY LEVEL NUMBER: 99351730

* QTY.	PART NAME	PART VALUE	PART NUMBER	DESCRIPTION AND DEVICE DESIGNATIONS **********
1	LEDGN2	LEDGN2	70450578	SE-8721-D-GN-25MM LDS RECT CR100
1	LEDYL2	LEDYL2	70450579	SE-8731-D-YEL-25MM LDS REC CR101
2	4SRHRAU	73717084	73717084	4 PIN RA SQ/P F/LK HD .100 J100, J101
1	50KB31DP	71190138	71190138	50K LINEAR 31 DETENT/WIRE TERMINAL VR100

****

LAST REF USED: CR101 J101 VR100

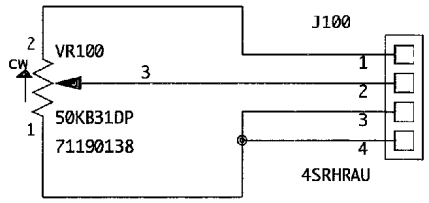

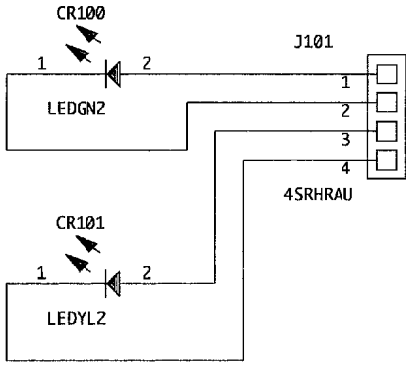

NOTICE: THIS CIRCUITRY IS PROTECTED BY U.S. PATENT NO. 5,387,876 (FOREIGN PATENT NOS. PENDING) OWNED BY PEAVEY ELECTRONICS CORP. USE OR COPYING WITHOUT EXPRESS WRITTEN AUTHORITY FROM PEAVEY IS STRICTLY FORBIDDEN AND VIOLATORS WILL BE PROSECUTED TO THE FULLEST EXTENT ALLOWED UNDER U.S.PATENT LAWS.

COPYRIGHT 1995 PEAVEY ELECTRONICS CORP. PRINTED IN U.S.A.

PEAVEY ELECTRONICS CORP.
711 A Street
Meridian, Mississippi 39301

TITLE
VX 1.5K 'B' LEVEL BOARD

SIZE	CODE	NUMBER	REV
A PRINT		99351740 #81502395	B

DATE 14-JUN-95 SHEET 1 OF 1

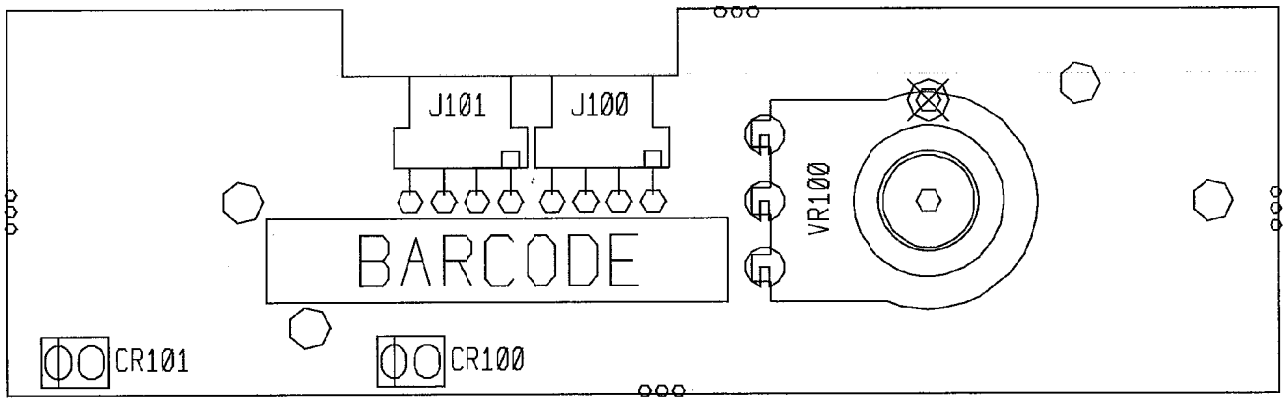

VX1.5K "B" Control

BOARD NAME: VX1.5K B CTL
ASSEMBLY LEVEL NUMBER: 99351740

PART * QTY.	NAME	VALUE	PART NUMBER	DESCRIPTION AND DEVICE DESIGNATIONS **********
1	LEDGN2	LEDGN2	70450578	SE-8721-D-GN-25MM LDS RECT CR100
1	LEDYL2	LEDYL2	70450579	SE-8731-D-YEL-25MM LDS REC CR101
2	4SRHRAU	73717084	73717084	4 PIN RA SQ/P F/LK HD .100 J100, J101
1	50KB31DP	71190138	71190138	50K LINEAR 31 DETENT/WIRE TERMINAL VR100

****

LAST REF USED: C102 F100 J151 R101 SOS

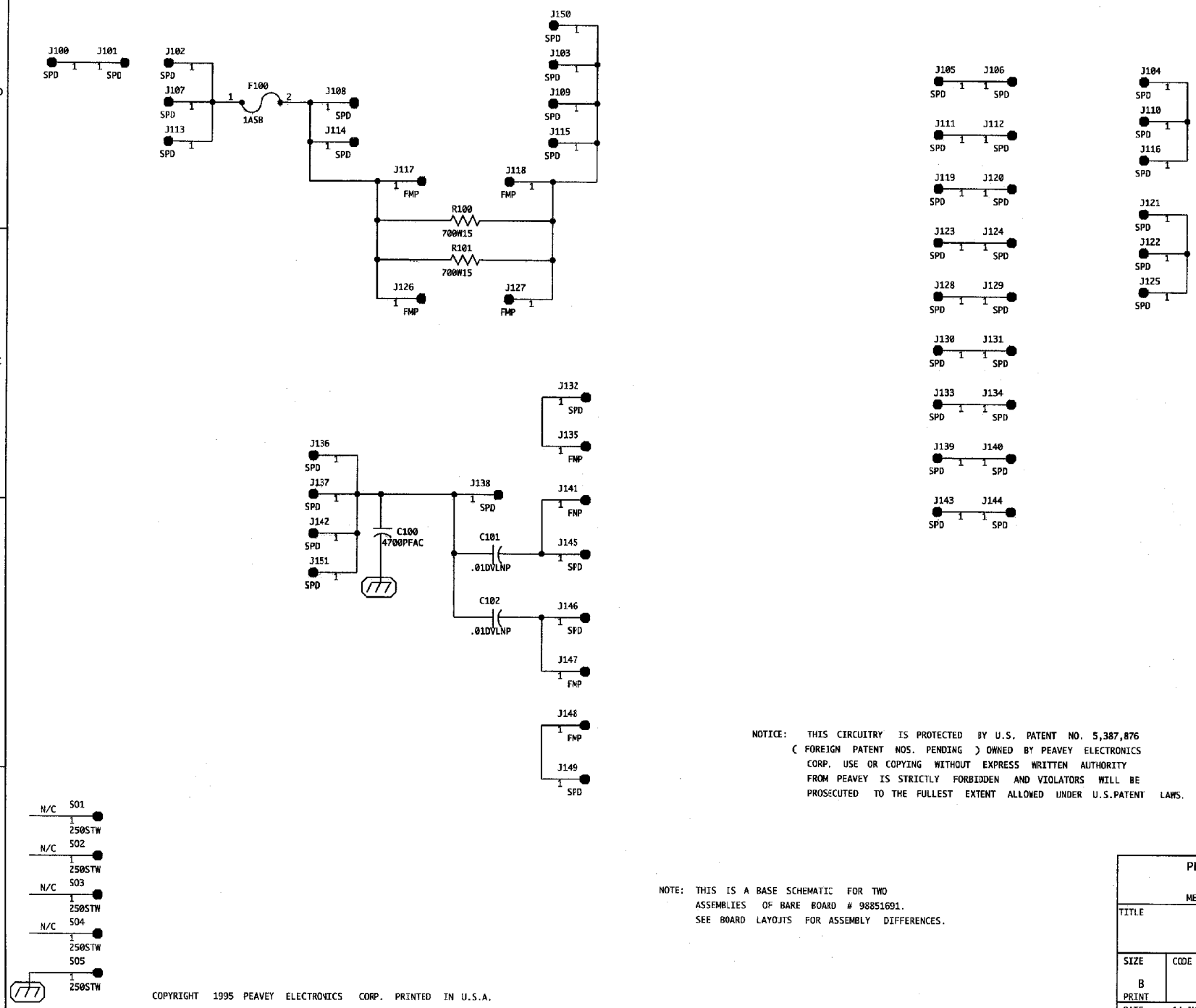

NOTICE: THIS CIRCUITRY IS PROTECTED BY U.S. PATENT NO. 5,387,876 (FOREIGN PATENT NOS. PENDING) OWNED BY PEAVEY ELECTRONICS CORP. USE OR COPYING WITHOUT EXPRESS WRITTEN AUTHORITY FROM PEAVEY IS STRICTLY FORBIDDEN AND VIOLATORS WILL BE PROSECUTED TO THE FULLEST EXTENT ALLOWED UNDER U.S.PATENT LAWS.

NOTE: THIS IS A BASE SCHEMATIC FOR TWO ASSEMBLIES OF BARE BOARD # 98851691. SEE BOARD LAYOUTS FOR ASSEMBLY DIFFERENCES.

COPYRIGHT 1995 PEAVEY ELECTRONICS CORP. PRINTED IN U.S.A.

PEAVEY ELECTRONICS CORP.
711 A STREET
MERIDIAN, MISSISSIPPI 39301

TITLE: VX 1.5K POWER

SIZE	CODE	NUMBER	REV
B		99351690-91	A
PRINT		#81502395	

DATE 14-JUN-95 SHEET 1 OF 1

NOTES

✳ Hand-solder specified resisitors into molex pins.
For Domestic version use 700W15 P/N 70250037 for R100 & R101.
For Export version use 1.5KW15 P/N 70250068 for R101.
Do NOT insert R100 on Export version.

Hand-solder Surge Limiters into molex pins as specified.
For Domestic version use 7.9A SURGISTOR P/N 70250113.
For Export version use 4.4A SURGISTOR P/N 70250122.

△ For Export version use 4700PFAC P/N 70320114 for C101 & C102

Do not insert C100 on Export version.

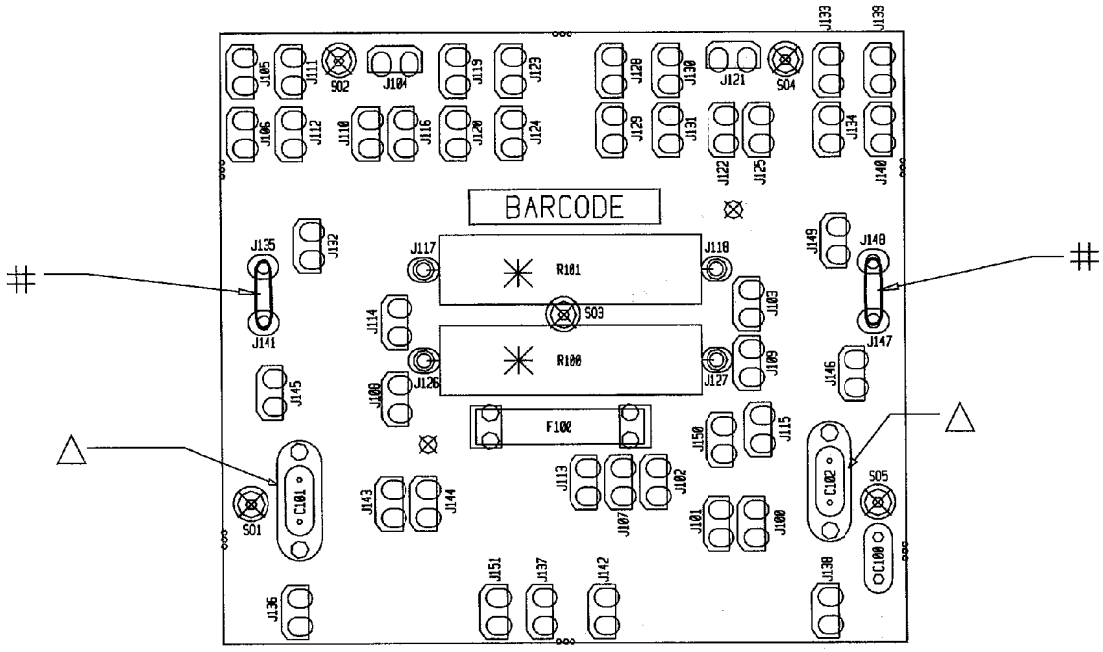

VX 1.5k POWER

ASSEMBLY NAME	ASSEMBLY NUMBER
VX 1.5K PWR-DOM	99351690
VX 1.5K PWR-EXP	99351691

BOARD NAME: VX1.5K 100V
ASSEMBLY LEVEL NUMBER: 99351690

PART * QTY.	NAME	PART VALUE	NUMBER	DESCRIPTION AND DEVICE DESIGNATIONS **********
1	4700PFAC	4700PFAC	70320114	4700PF 400VAC EXP LINE CAP X C100
2	.01DVLNP	.01DVLNP	70320104	.01 MFD 125VDC DVL MYLAR +0-20% C101, C102
1	1ASB	1ASB	70900379	1 AMP S/B FUSE WITH 2 FUSECLIPS #70900816 F100
17	SPD	73716194	73716194	.250 PC MNT SPADE .093 PCB J100, J101, J102, J103, J104, J105, J106, J107, J108, J109, J110, J111, J112, J113, J114, J115, J116
2	FMP	FMP	73711811	M118-171 C.B. FEMALE MOLEX PIN J117, J118
7	SPD	73716194	73716194	.250 PC MNT SPADE .093 PCB J119, J120, J121, J122, J123, J124, J125
2	FMP	FMP	73711811	M118-171 C.B. FEMALE MOLEX PIN J126, J127
7	SPD	73716194	73716194	.250 PC MNT SPADE .093 PCB J128, J129, J130, J131, J132, J133, J134
1	FMP	FMP	73711811	M118-171 C.B. FEMALE MOLEX PIN J135
5	SPD	73716194	73716194	.250 PC MNT SPADE .093 PCB J136, J137, J138, J139, J140
1	FMP	FMP	73711811	M118-171 C.B. FEMALE MOLEX PIN J141
5	SPD	73716194	73716194	.250 PC MNT SPADE .093 PCB J142, J143, J144, J145, J146
2	FMP	FMP	73711811	M118-171 C.B. FEMALE MOLEX PIN J147, J148
3	SPD	73716194	73716194	.250 PC MNT SPADE .093 PCB J149, J150, J151
2	700W15	700W15	70250037	700 15W-10%-WW-AXL R100, R101
5	250STW	70901856	70901856	SPCR, 1/4,R(#4),.187 SW,AL S01, S02, S03, S04, S05

****

LAST REF USED: C101 J117 L101 R103

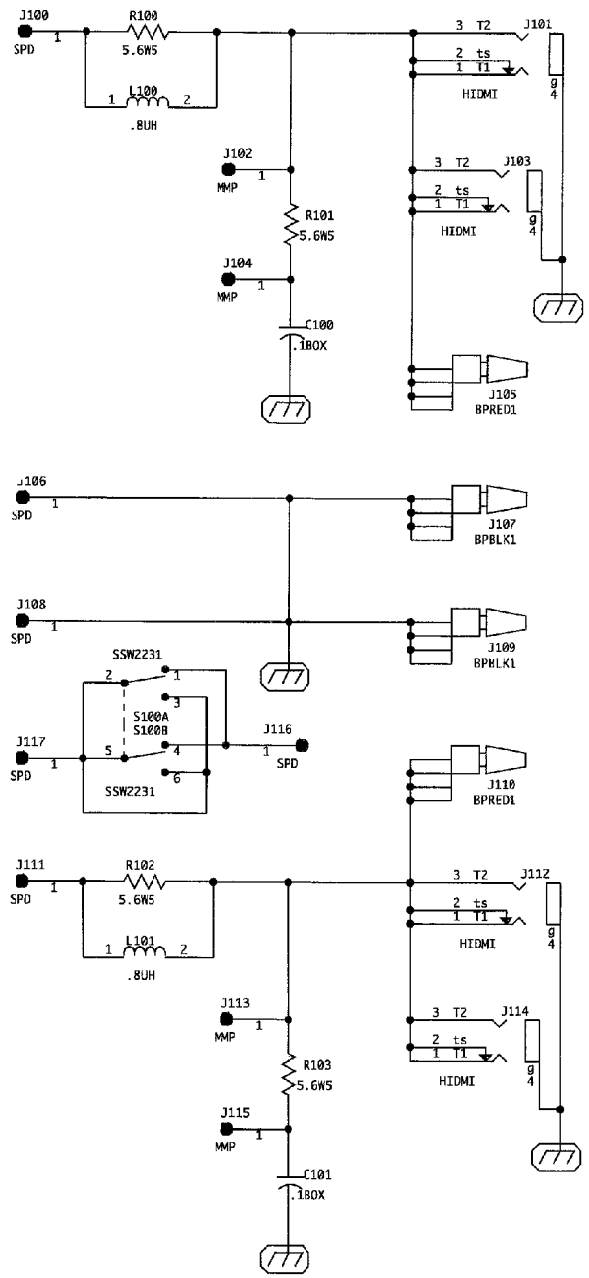

NOTICE: THIS CIRCUITRY IS PROTECTED BY U.S. PATENT NO. 5,387,876 (FOREIGN PATENT NOS. PENDING) OWNED BY PEAVEY ELECTRONICS CORP. USE OR COPYING WITHOUT EXPRESS WRITTEN AUTHORITY FROM PEAVEY IS STRICTLY FORBIDDEN AND VIOLATORS WILL BE PROSECUTED TO THE FULLEST EXTENT ALLOWED UNDER U.S.PATENT LAWS.

PEAVEY ELECTRONICS CORP.
711 A STREET
MERIDIAN, MISSISSIPPI 39301

TITLE
VX 1.5K JACK BOARD

SIZE	CODE	NUMBER	REV
B PRINT		99351700 #81502395	A
DATE 14-JUN-95		SHEET 1 OF 1	

COPYRIGHT 1995 PEAVEY ELECTRONICS CORP. PRINTED IN U.S.A.

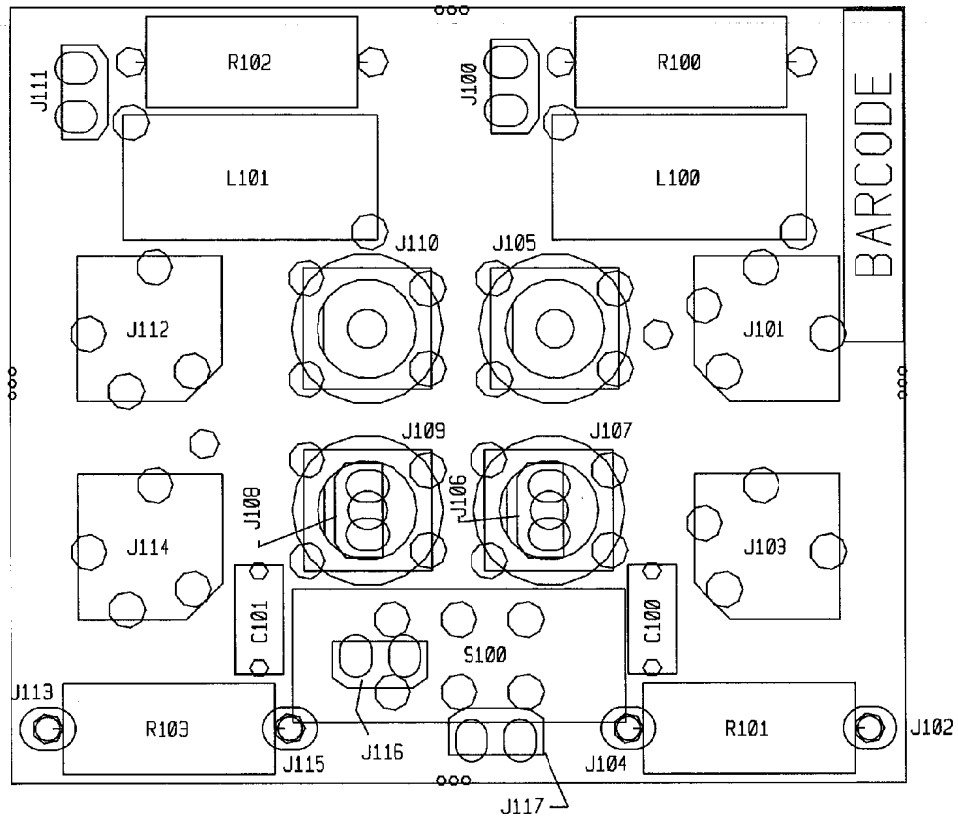

VX1.5K Jack

BOARD NAME: VX 1.5K JACK
ASSEMBLY LEVEL NUMBER: 99351700

PART * QTY.	NAME	PART VALUE	NUMBER	DESCRIPTION AND DEVICE DESIGNATIONS **********
2	.1BOX	.1BOX	70320086	.1 MFD 100VDC 10% BOX CAP C100, C101
1	SPD	73716194	73716194	.250 PC MNT SPADE .093 PCB J100
1	HIDMI	71466215	71466215	2 TIP HID JACK INSU W/SPD J101
1	MMP	MMP	73711812	R93-12 PN C.B. MALE MOLEX PIN J102
1	HIDMI	71466215	71466215	2 TIP HID JACK INSU W/SPD J103
1	MMP	MMP	73711812	R93-12 PN C.B. MALE MOLEX PIN J104
1	BPRED1	71466201	71466201	BINDING POST PC RED-90 J105
1	SPD	73716194	73716194	.250 PC MNT SPADE .093 PCB J106
1	BPBLK1	71466200	71466200	BINDING POST PC BLK-90 J107
1	SPD	73716194	73716194	.250 PC MNT SPADE .093 PCB J108
1	BPBLK1	71466200	71466200	BINDING POST PC BLK-90 J109
1	BPRED1	71466201	71466201	BINDING POST PC RED-90 J110
1	SPD	73716194	73716194	.250 PC MNT SPADE .093 PCB J111
1	HIDMI	71466215	71466215	2 TIP HID JACK INSU W/SPD J112
1	MMP	MMP	73711812	R93-12 PN C.B. MALE MOLEX PIN J113
1	HIDMI	71466215	71466215	2 TIP HID JACK INSU W/SPD J114
1	MMP	MMP	73711812	R93-12 PN C.B. MALE MOLEX PIN J115
2	SPD	73716194	73716194	.250 PC MNT SPADE .093 PCB J116, J117
2	.8UH	.8UH	70519917	.8UH AIR CORE COIL / CS1200 L100, L101
4	5.6W5	5.6W5	70250026	5.6-5W-10%-WW-AXL R100, R101, R102, R103
1	SSW2231	SSW2231	71322231	DPDT SLIDE SW LQ LEAD S100

****

LAST REF USED: C101 J102 L101 R103 S100 SD105 MP103 SP103

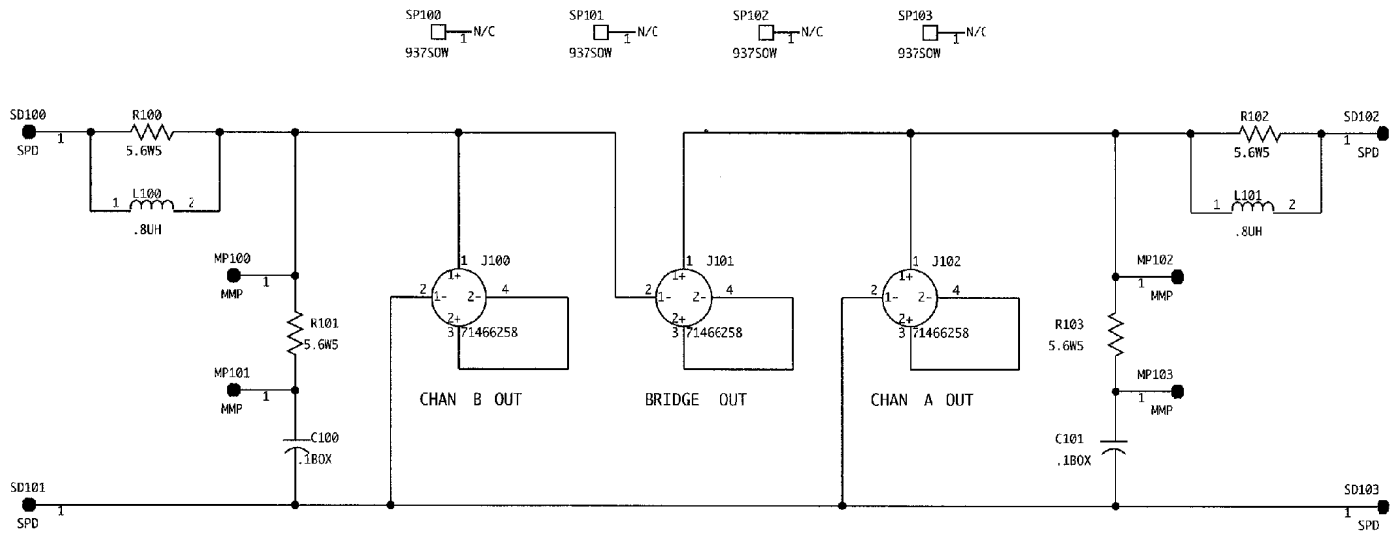

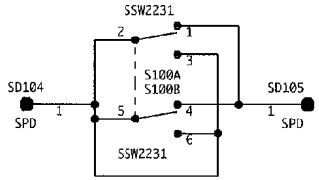

GROUND LIFT

NOTICE: THIS CIRCUITRY IS PROTECTED BY U.S. PATENT NOS. 4,318,053 RE.33,333 4,724,396 AND 4,992,751. FOREIGN #'S 609656 357 78 538.1 64356 0,172,737 158,213 2,009,775 173,212 49567 0,386,933 P 690 11 550,4-08 (PATENTS PENDING) OWNED BY PEAVEY ELECTRONICS CORP. USE OR COPYING WITHOUT EXPRESS WRITTEN AUTHORITY FROM PEAVEY IS STRICTLY FORBIDDEN AND VIOLATORS WILL BE PROSECUTED TO THE FULLEST EXTENT ALLOWED UNDER U.S. PATENT LAWS.

COPYRIGHT 1995 PEAVEY ELECTRONICS CORP. PRINTED IN U.S.A.

PEAVEY ELECTRONICS CORP. 711 A STREET MERIDIAN, MISSISSIPPI 39301			
TITLE CS-1800 EURO OUTPUT BOARD			
SIZE B PRINT	CODE	NUMBER 81502395	REV A
DATE 12-NOV-96		SHEET 1 OF 1	

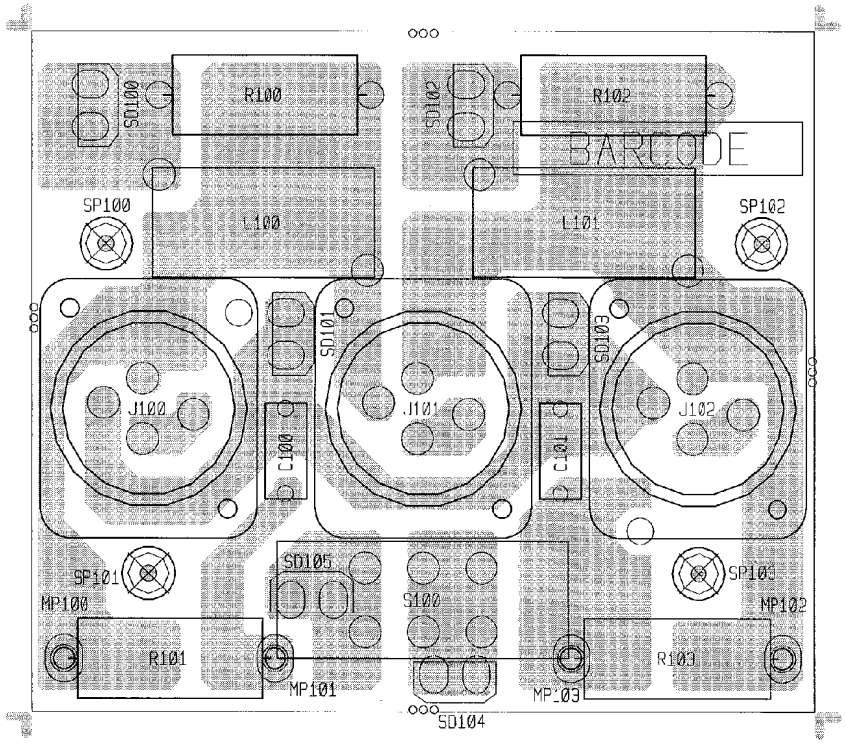

BOARD NAME: CS1800G E/O REPORT DATE: 20CT96

** QTY.	PART NAME	VALUE	PART NUMBER	DESCRIPTION AND DEVICE DESIGNATIONS **********
2	.1BOX	.1BOX	70320086	.1 MFD 100VDC 10% BOX CAP C100, C101
3	71466258	71466258	71466258	PCB CONN, 4 POLE SPEAKON (NEUTRIK) J100, J101, J102
2	.8UH	.8UH	70519917	.8UH AIR CORE COIL / CS1200 L100, L101
4	MMP	MMP	73711812	R93-12 PN C.B. MALE MOLEX PIN MP100, MP101, MP102, MP103
4	5.6W5	5.6W5	70250026	5.6-5W-10%-WW-AXL R100, R101, R102, R103
1	SSW2231	SSW2231	71322231	DPDT SLIDE SW LQ LEAD S100
6	SPD	73716194	73716194	.250 PC MNT SPADE .093 PCB SD100, SD101, SD102, SD103, SD104, SD105
4	937SOW	70900786	70900786	SPACER, 15/16,R(#4),.187 SWAGE ALUM. SP100, SP101, SP102, SP103

****

CS-1800G Euro Output