Contents

Warranty **1**
Specifications **2**
Technical Description **2**
Disassembly/Assembly Procedures **3-4**
Figure 1. Woofer Wiring Configuration **3**
Figure 2. Test Equipment Set Up **4**
Test Procedures **5**
Main Part List **6**
Figure 3. Exploded View **6**
Crossover Part list **7**
Figure 4. Crossover Diagram **7**
Packaging Part List **8**
Figure 5. Packaging Exploded View **8**

CAUTION: The Bose® Model 301® Series V loudspeaker contains no user-serviceable parts. To prevent warranty infractions, refer servicing to warranty service stations or factory service.

WARRANTY

The Bose Model 301 Series V loudspeaker is covered by a five-year limited warranty.

PROPRIETARY INFORMATION

THIS DOCUMENT CONTAINS PROPRIETARY INFORMATION OF BOSE CORPORATION WHICH IS BEING FURNISHED ONLY FOR THE PURPOSE OF SERVICING THE IDENTIFIED BOSE PRODUCT BY AN AUTHORIZED BOSE SERVICE CENTER OR OWNER OF THE BOSE PRODUCT, AND SHALL NOT BE REPRODUCED OR USED FOR ANY OTHER PURPOSE.

SPECIFICATIONS

Dimensions:	Single Speaker:	9.375" H x 14.625" W x 9.375" D (25 x 36 x 25 cm)
Weight:	Packed pair: Single speaker:	28.7 lb (16.5 kg) 12.5 lb (5.7 kg)
Transducer complement:		One 8" woofer Two 2" tweeters
Internal cabinet volume:		961 cu in (15.8 liters)
Port:	Description:	Dual flared ports molded as part of the rear panel ports tuned to 48 Hz
Low frequency cutoff:		-3 dB at 55 Hz or lower
Impedance:		6 Ohms 4.8 Ohms minimum, 50 Hz to 15 kHz per IEC-268-5
Power handling:		75 W (21.2 Vrms) continuous per IEC 268-5 for a duration of 100 hours. Recommended amp/receiver power 10 to 150 Watts per channel
Sensitivity:	1Vrms, 1 meter:	= 79 dB SPL, 400 Hz octave

PRODUCT DESCRIPTION

The Bose® 301® Series V is a replacement for the 301 Series IV speaker, and is a passive, two-piece (mirror imaged stereo pair) home loudspeaker in a bookshelf configuration. The 301 Series V is designed for use with standard amplifiers, receivers, and other related home audio components.

The 301 Series V utilizes separate inward and outward firing tweeters to achieve consistent stereo imaging over a broad listening area (Stereo Everywhere® performance) while maintaining a spacious sound stage.

Aesthetically, the 301 Series V echoes styling cues successfully used in the 601® Series IV and the 701® Series II, and has a family resemblance to the 201® Series V. The 301 Series V features a molded plastic front panel, integrated with a vinyl-covered particle board enclosure.

Additionally, the system incorporates slot-port technology which reduces port noise and produces cleaner, more natural bass. The sum of all these unique features makes the 301 Series V speaker capable of reproducing the wide dynamic range demanded by today's advanced recordings without strain or loss of clarity.

DISASSEMBLY/ASSEMBLY PROCEDURES

Note: Refer to figure 3 for the following procedures.

1. Grille Removal

1.1 Grasp the top and bottom edges of the grille (12) and pull off the grille.

2. Grille Replacement

2.1 Align the grille (12) so that the Bose® logo (11) is right side up on the tweeter side of the cabinet and push it into place.

3. Woofer Removal

3.1 Perform procedure 1.

3.2 Remove the four screws (13) that secure the woofer (14) to the cabinet.

3.3 Lift the woofer out and cut the wires as close to the terminals as possible.

4. Woofer Replacement

4.1 Strip the wires and connect the wires as shown in figure 1. The red wire to the single center terminal. The black wire to the right side double terminal (looking at the woofer magnet side down). The orange and green wires to the left double terminal. The capacitor is connected to the far left and right terminals.

4.2 Secure the woofer (14) to the cabinet using four screws (13).

4.3 Perform procedure 2.

5. Front Tweeter Removal

5.1 Perform procedures 1, 3.2 and lift the wooter out of the cabinet, but do not cut the wires.

5.2 Using a 1/4 inch socket, remove the screw (6) and bracket (7) that secures the tweeter (8) to the cabinet.

5.3 Lift the tweeter out of the cabinet and cut the wires as close to the terminals as possible.

6. Front Tweeter Replacement

6.1 Strip the wires and connect the red wire to the positive (+) terminal and the black wire to the negative (-) terminal. Dress or twist the wires to prevent buzzes.

6.2 Place the tweeter (8) into the cabinet and secure it using the tweeter bracket (7) and screw (6).

6.3 Perform procedures 4.2 and 2.

7. Rear Tweeter Removal

7.1 Perform procedures 1, 3.2 and lift the woofer out of the cabinet, but do not cut the wires.

7.2 Using a 1/4 inch wrench, remove the screw (1) and bracket (2) that secures the tweeter (3) to the cabinet.

7.3 Lift the tweeter out of the cabinet and cut the wires as close to the terminals as possible.

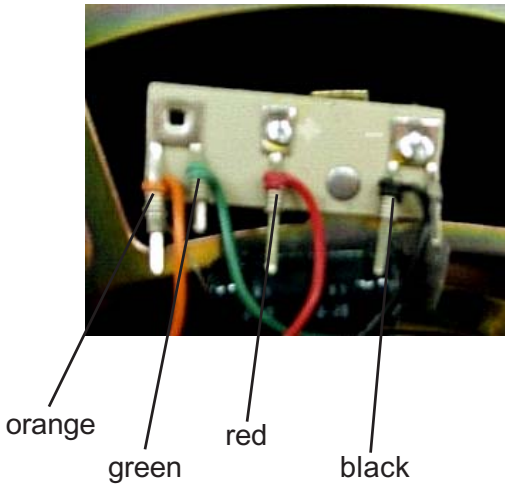

Figure 1. Woofer Wiring Configuration

DISASSEMBLY/ASSEMBLY PROCEDURES

8. Rear Tweeter Replacement

8.1 Strip the wires and connect the red wire to the positive (+) terminal and the black wire to the negative (-) terminal. Dress or twist the wires to prevent buzzes.

8.2 Place the tweeter (3) into the cabinet and secure it using the tweeter bracket (2) and screw (1).

8.3 Perform procedures 4.2 and 2.

9. Terminal Block Connector Removal

9.1 Perform procedures 1, 3.2 and lift the woofer out of the cabinet, but do not cut the wires.

9.2 Unclip the terminal block connector (4) from the inside of the cabinet and push it out through the rear panel. Cut the wires as close to the terminals as possible.

10.1 Terminal Block Connector Replacement

10.1 Strip the wires and connect the red wire to the positive (+) terminal and the black wire to the negative (-) terminal. Dress or twist the wires to prevent buzzes.

10.2 Secure the terminal block connector (4) to the cabinet.

10.3 Perform procedure 4.2 and 2.

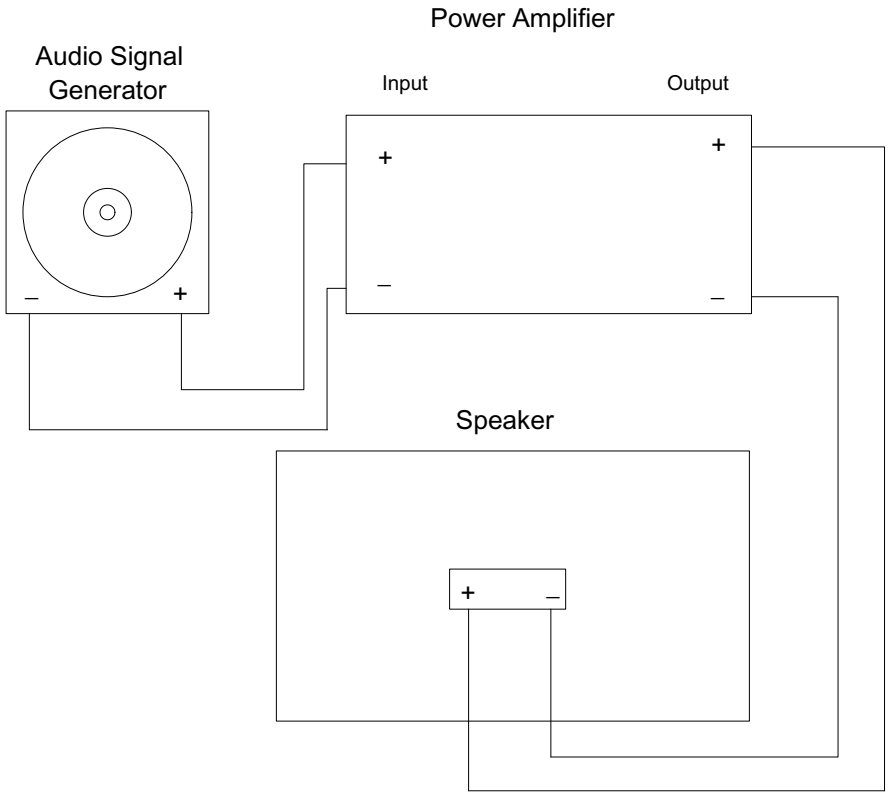

Figure 2. Test Equipment Set Up

TEST PROCEDURES

Note: Remove the grille for the following tests.

General Test Set Up

Connect the output of a signal generator to the input of a power amplifier. Connect the output of the power amplifier to the input terminals of the speaker under test. Refer to figure 2, (on page 4) test equipment set up.

1. Woofer Rub and Tick Test

1.1 Apply a 7 Vrms, 10 Hz signal to the input terminals of the speaker under test. No extraneous noises such as rubbing, scraping or ticking should be heard.

Note: To distinguish between normal suspension noise and rubs or ticks, displace the cone on the woofer slightly with your fingers. If the noise can be made to go away or get worse, it is a rub or a tick and the woofer should be replaced. If the noise stays the same, it is a normal suspension noise and the woofer is fine. Suspension noises will not be heard with program material.

2. Air Leak Test

2.1 Apply a 7 Vrms, 35 Hz signal to the input terminals of the speaker under test.

2.2 Listen for air leaks around the woofer, tweeters and cabinet seams. Any air leaks will be heard as a sputtering or hissing sound.

2.3 Replace or reposition any gasket where an air leak can be heard.

3. Sweep Test

3.1 Apply a 7 Vrms, 10 Hz signal to the input terminals of the speaker under test.

3.2 Sweep the input generator from 10 Hz to 5 kHz. There should be no extraneous sounds.

3.3 Reduce the input voltage to 3 Vrms, and continue sweeping from 5 kHz to 15 kHz.

3.4 Redress any wires or components that buzz or rattle. Replace any woofer or tweeter that is found to be defective.

4. Phase Test

Note: The supply voltage should only be momentarily applied to the speaker input terminals to avoid possible damage to the speaker.

4.1 Set a DC power supply to 9 volts. Connect the positive wire from the power supply to the positive (+) connector of the input terminal and the negative wire to the negative (-) connector of the input terminal. The woofer should move outward with the application of the supply voltage.

MAIN PART LIST

Item Number	Description	Part Number	Qty.	Note
1	SCREW, MACH, SEMS, 8-32, HEX	256070-08	1	
2	CLIP, TWTR RETAIN, REAR	264973-03	1	
3	TWEETER, 2", REAR TWEETER, 2", REAR, SHLD	290845-01 290836-01	1	
4	CONN, BARRIER GLTN, 2 POS	181865	1	
5	BATTING, POLYESTER	116082 or 260336	1	
6	SCREW, MACH, SEMS, 8-32, HEX	256070-08	1	
7	CLIP, TWTR RETAIN, FRONT	264973-01	1	
8	TWEETER, 2", FRONT, (WITH SLIVER TRIM SKIRT) TWEETER, 2", FRONT, (WITH BLACK TRIM SKIRT)	290847-01 290813-01	1	
9	GASKET, WOOFER, 8"	266118	1	
10	GROMMET, GRILLE SOCKET	176068	4	
11	NAMEPLATE, LOGO	266108	1	
12	GRILLE ASSY, BLACK	266105-01	1	
13	SCREW, TAPP, 8-11 x .75, PAN, XRC/SQ	172672-12	4	
14	WOOFER ASSY, 8", (WITH TRIM RING)	289908-001	1	

Note 4: When replacing the tweeters, replace with like tweeter.
If the front tweeter has a silver trim use 290845-01 for the rear and 290847-01 for the front
If the front tweeter has a black trim, use 290836-01 for the rear and 290813-01 for the front

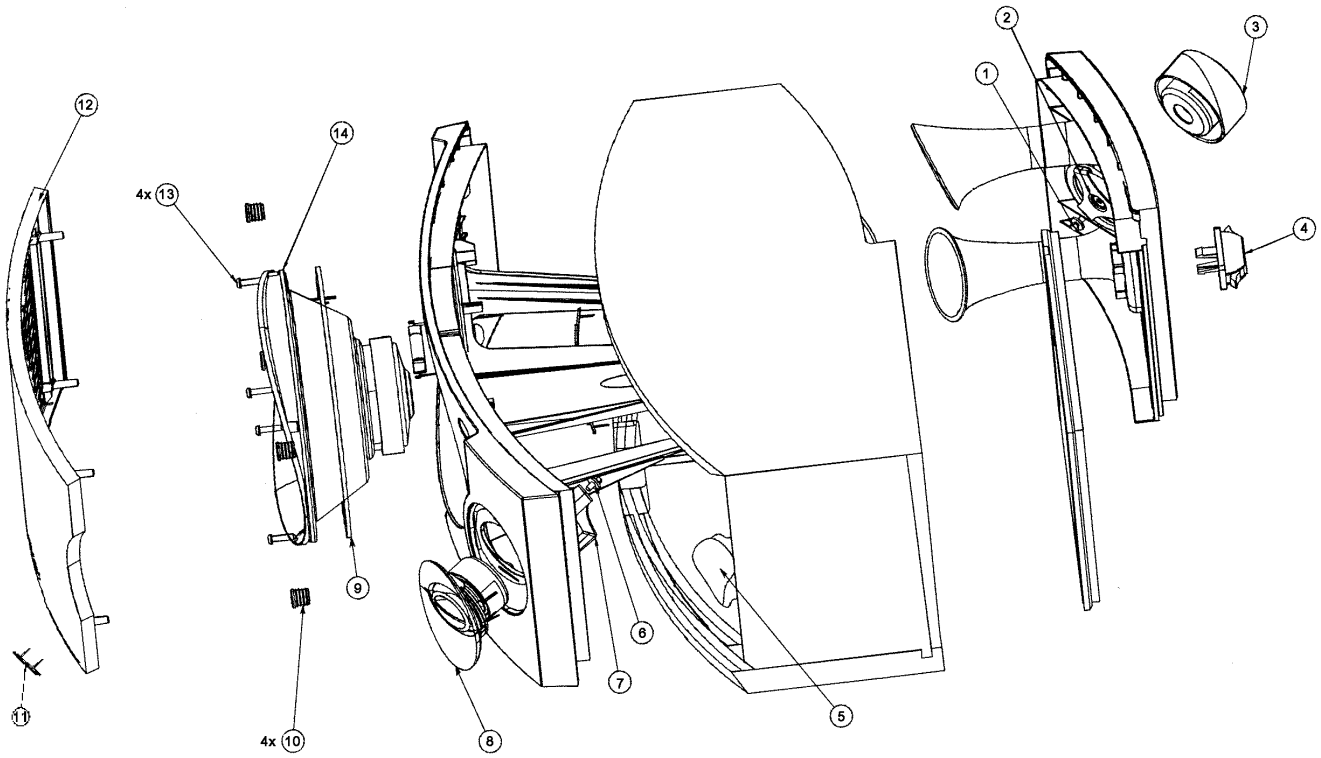

CROSSOVER PART LIST

Reference Designator	Description	Part Number	Note
C1	4.0uF, EL, BP, 85°C, 50V, 10%	116542	
C2	15uF, EL, BP, 85°C, 50V, 10% (ON WOOFER)	126798	
RT1	LAMP, MINI, 1.5A, 36VDC	141989	

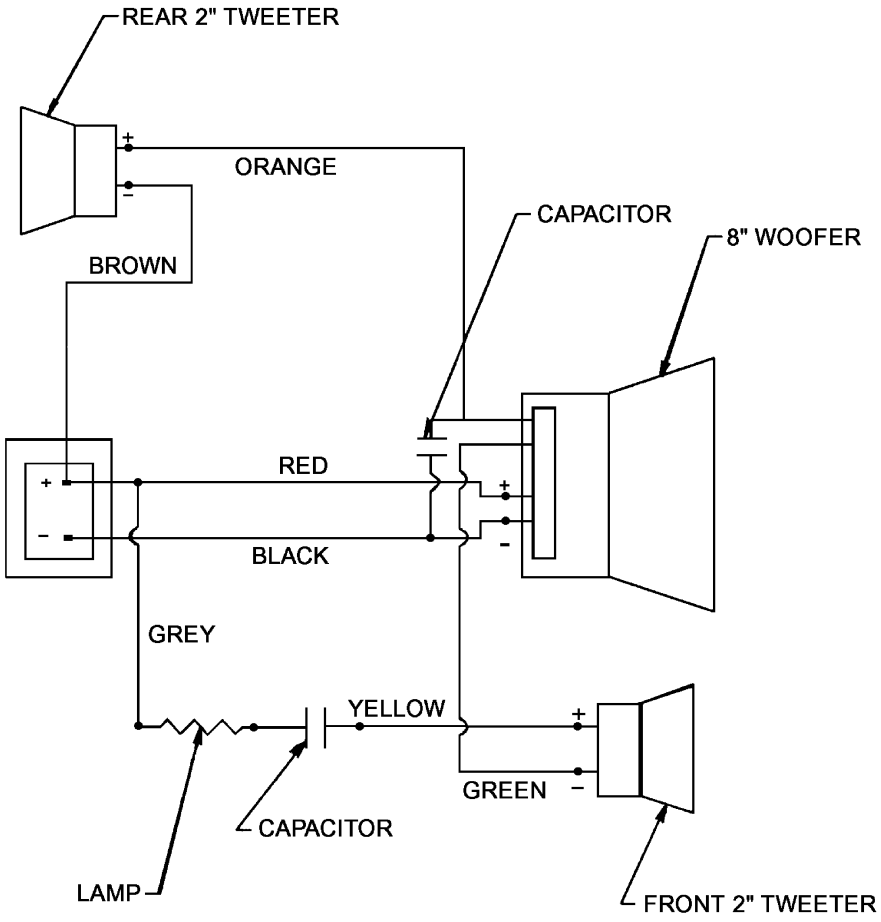

Figure 4. Crossover Diagram

PACKAGING PART LIST

Item Number	Description	Part Number	Qty.	Note
1	MANUAL, OWNER'S	264981	1	
2	INFO CARD, WARRANTY, MULTI LANG	181460	1	
3	CARD, REGISTRATION AND WARRANTY	262933	1	
4	BUMPER, FOOT, ADH BACKED, 8-CT	173012-08	1	
5	ADDRESS PAGE	259434	1	
6	SHEET SLIP ALL PRODUCTS	255808	1	
7	COMMITMENT LETTER	251001	1	
8	BAG, POLY, 14.38" x 9.87" x 2 mil	103351	1	
9	BAG, POLY, HDPE 13.5" x 35" x 9.5" x 1MIL	114522	1	
10	PACKING, EPS	266123	4	
11	CARTON, RSC	266122-01	1	

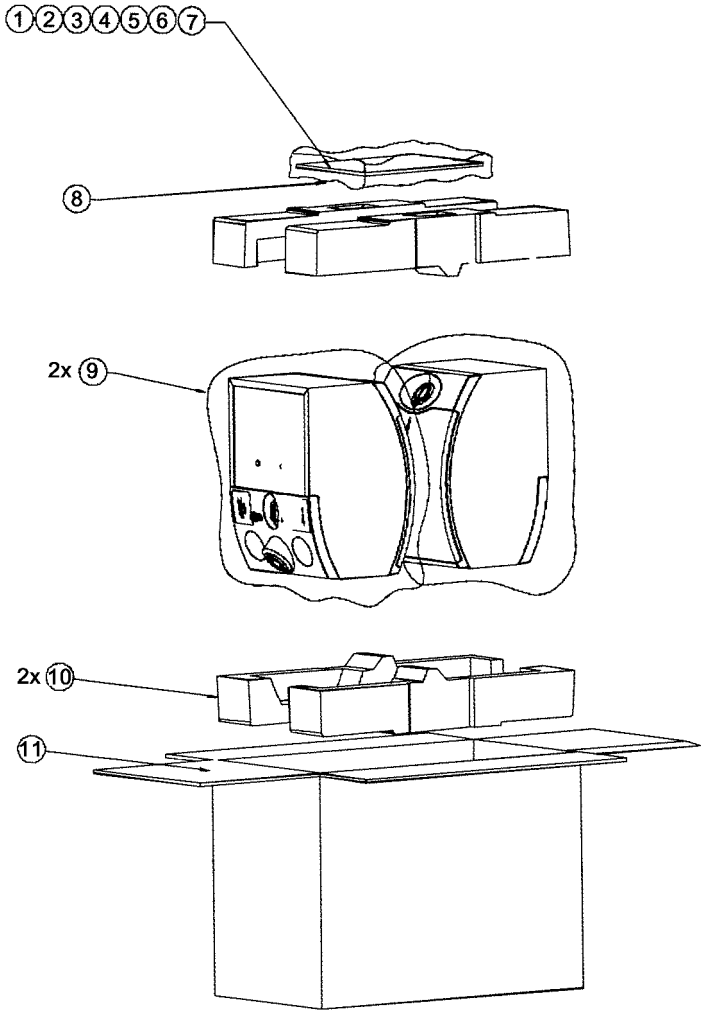

Figure 5. Packaging Exploded View

BOSE®
Better sound through research®

Bose® Model 301® Series V Loudspeaker

©2002 Bose Corporation

Service Manual

Part Number 267215 Rev. 00

SPECIFICATIONS AND FEATURES SUBJECT TO CHANGE WITHOUT NOTICE

BOSE®

Better sound through research®

Bose Corporation
The Mountain
Framingham Massachusetts USA 01701

P/N: 267215 Rev. 00 10/2002 (H) FOR TECHNICAL ASSISTANCE OR PART ORDERS, CALL 1-800-223-4408
http://serviceops.bose.com